Part II

Bearing measurement by a single transducer

Chapter 2

Introduction to bearing measurement by a single transducer

In pulse-echo method ultrasonic sensing, distance to a target is calculated from round-trip time-of-flight (TOF) by transmitting an ultrasonic pulse and detecting its echo from the target. In conventional pulse-echo methods, distance to a target can be accurately measured, but accurate measurement of direction to a reflecting point is difficult. This is due to wide directivity of ultrasonic transducers.

In this part, I propose a simple method to measure an accurate bearing angle than beam width of the transducer using center frequency of detected echo signal. This method has two big advantages:

- Simplicity of hardware. We can measure accurate bearing angle by using just a single ultrasonic transducer.
- Fast measurement. We can measure accurate bearing angle by using simple process to detect difference of frequency, and consequently you can achieve fast measurement.

The proposed method uses the fact that frequency of an echo is mainly depending on the bearing angle of its coming from, and it makes possible to achieve accurate bearing measurement just by using frequency.

2.1 Theoretical back-ground

Before proposing a sensing method, I would like to describe why it is possible to measure the accurate bearing angle by detecting difference of frequency. In this explanation I use a physical model for ultrasonic sensing which employs an impulse response of transducers [Kuc 87].

2.1.1 Signal transformations in pulse-echo method

In the pulse-echo method received wave form depend on many factors:
transducers, excitation, dispersion and absorption in air and reflector properties. Since these factors are assumed linear, received wave form from a single object can be expressed interns of equation (2.1-2.4) from [Kleeman 95].

$$f(t) = s(t) * h_{trans}(t) * h_{pro_f}(t) * h_{ref}(t) * h_{pro_b}(t) * h_{rec}(t) \tag{2.1}$$

where, $*$ demotes convolution, s(t) is excitation signal given to the transmitter and $h_{symbol}(t)$ are linear impulse responses due to the each part.

The each impulse response is analyzed as follows: $h_{pro_f}(t)$ and $h_{pro_b}(t)$ are due to propagation in forward and backward direction between the transmitter/receiver and the reflecting object, respectively. They include dispersion and absorption in the air as well as the wave propagation time. Only the absorption of the wave during propagation depend on the frequency. However, in case of short propagation as like a few meters, it does not give big effect on the wave form.

$h_{ref}(t)$ is due to the reflection at the surface of the object. It depends on the shape of the object and the incident angle. With respect to the wave form just after the leading edge, we can assume the reflecting point on the object is the flat surface being normal to the incident direction or the edge of it. Therefore, and also empirically, we have known that the wave form is not much depending on the shape of the object or the material, as far as observing around the leading edge of the reflecting echo.

$h_{trans}(t)$ and $h_{rec}(t)$ are due to the ultrasonic transmitter and receiver, respectively. They denote the relationship between the electric signal given/detected at the transducer and acoustic wave form directed to/from the reflecting object.

2.1.2 Modeling the direction dependency of an echo signal

The signal transformation on the transmitter and receiver respectively, $h_{trans}(t)$ and $h_{rec}(t)$ are the physically combined functions of the acoustic wave motion transformation on the transducer surface and mechanical-electrical transformation, and they can be represented as

$$h_{trans}(t, \theta_T) = h_\theta(t, \theta) * h_{trans_r}(t) \tag{2.2}$$

$$h_{rec}(t, \theta_R) = h_\theta(t, \theta) * h_{rec_r}(t) \tag{2.3}$$

where h_{trans_r} and h_{rec_r} are the impulse responses of the transmitter and receiver at normal angle of transmission and incidence. The impulse response $h_\theta(t, \theta)$ denotes the effect of the incident angle of the wave propagation.

With respect to the receiver, the echo is regarded as a plane wave front near the transducer (Figure 2.1). At that time, when the plane wave front reaches at the surface of the

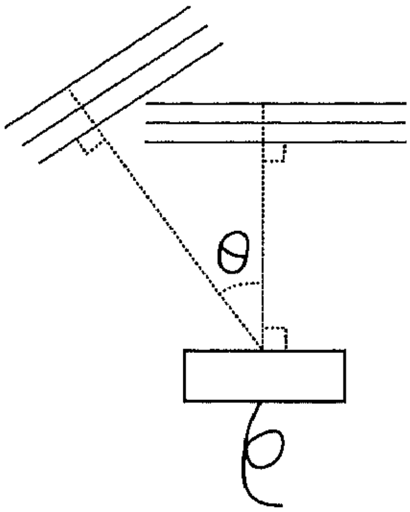

Figure 2.1: The impulse which transfer in the air is regarded as it has the flat wave front near the receiver.

transducer from the direction at the angle θ, the wave scan the surface of the transducer once. Furthermore, for a circular transducer, if the input to the transducer is in proportion to the intersection of the plane wave and the surface of the transducer, the impulse response $h_\theta(t,\theta)$ has the shape of the positive half of an ellipse with width equal to the propagation time across the surface of the transducer (Figure 2.2). That is,

$$h_\theta(t,\theta) = \begin{cases} \frac{4c\cos(\theta)}{\pi D\sin(|\theta|)}\sqrt{1-(\frac{2t}{t_w})^2} & (-\frac{t_w}{2} < t < \frac{t_w}{2}) \\ 0 & \text{otherwise} \end{cases} \tag{2.4}$$

For the transmitter, this characteristic is the same due to reciprocity.

Equation (2.4) shows that when the wavefront is incident normal to the transducer no change is affected by h_θ, but when increasing obliqueness of incidence occurs the wavefront is filtered by an increasingly wide elliptical h_θ, which acts as low pass filter with decreasing cutoff frequency.

2.1.3 Direction Dependency Model in Frequency Domain

With respect to the echo in the frequency domain, the power spectrum of the linear modeled echo is expressed as follows:

$$\begin{aligned} & S_r(\omega,\theta_T,\theta_R,r) \\ & = S_s(\omega)\cdot H^2_{trans}(\omega,\theta_T)\cdot H^2_{air}(\omega,r)\cdot H^2_{ref}(\omega)\cdot H^2_{air}(\omega,r)\cdot H^2_{rec}(\omega,\theta_R) \end{aligned} \tag{2.5}$$

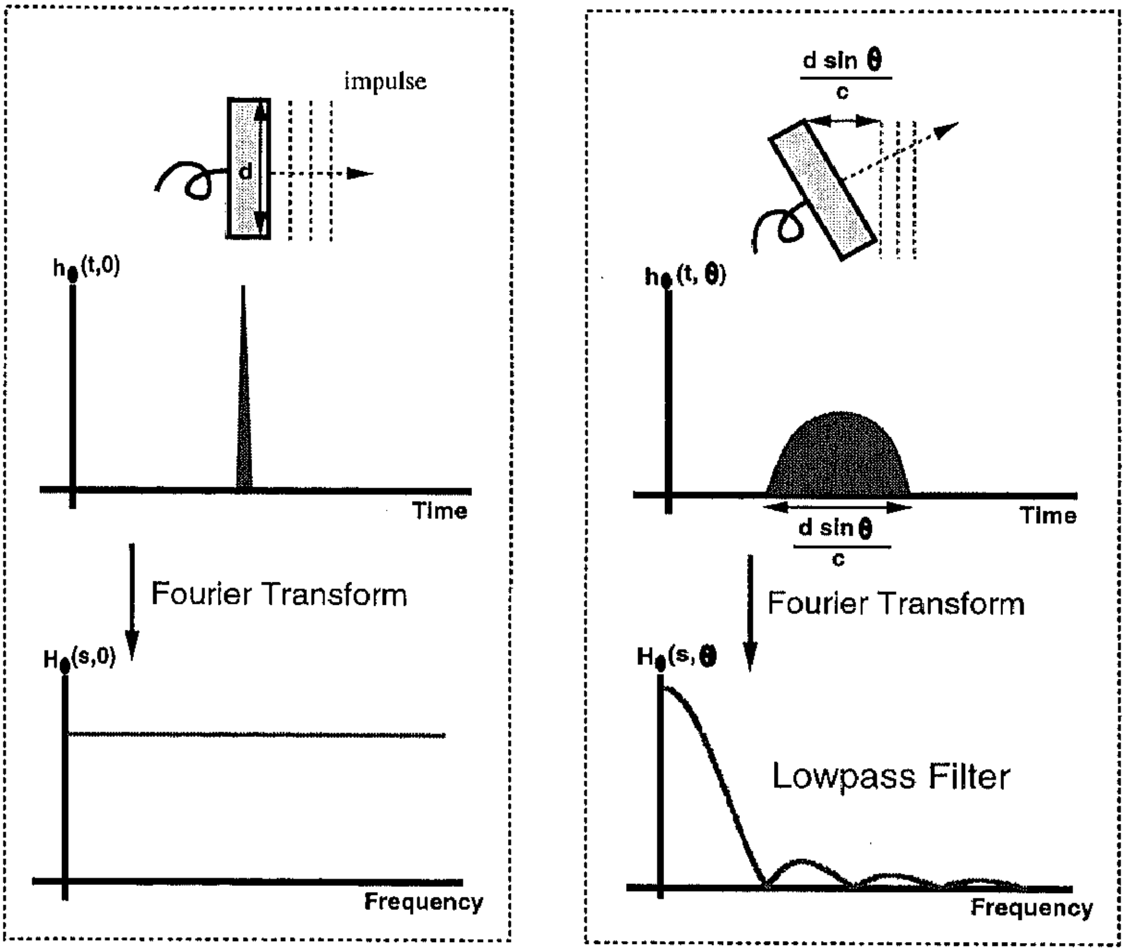

Figure 2.2: The transfer function depending on the direction which impulse is coming from in the impulse response model.

Here, the positions of the transmitting/receiving transducer and the reflecting object are fixed, and then rotate the direction of the transducer. In case the angle from the normal direction to the surface of the transducer to the reflecting point is θ, and $\theta = |\theta_R| = |\theta_T|$; power spectrum of the received echo signal is given as:

$$S_r(\omega) = S_0(\omega) \cdot H_\theta^4(\omega, \theta) \tag{2.6}$$

where $S_0(\omega)$ is the power spectrum when the reflecting object is at the normal direction to the face of the transducer, and $H_\theta(\omega, \theta)$ is the Fourier transform of $h_\theta(t, \theta)$ given in Equation (2.4) which is decided by the aperture size of the transducer and incidence angle of the reflected object.

2.2 Main idea

As explained above, the power spectrum of the echo is multiplied by the power spectrum of the echo which was detected from the reflecting point at the normal direction, and $H_\theta^4(\omega, \theta)$ which is determined by θ which is the angle between the normal direction of the surface of the transducer and the direction of the reflecting object. Usually, the frequency characteristic of propagation and reflection, $H_{air}(\omega, r)$ and $H_{ref}(\omega)$ are not effected much on the propagation length and the reflecting object. That means, the frequency characteristics of the reflected echo signal, mainly depends on the direction of the reflecting point. Therefore, using this property, we will be able to know the bearing angle of the object, by analyzing the frequency characteristics of the received reflected signal in pulse-echo method.

2.3 Overview of Part II

In the next chapter, I will propose a fast and accurate bearing angle measurement method by a single ultrasonic transducer using frequency difference explained in this chapter. The experiments for evaluating the proposed method and the results are shown in chapter 4. At the end of this part, chapter 5, I discuss the fast and accurate bearing measurement method by a single transducer and conclude this study.

Chapter 3

Proposal of bearing measurement using frequency

In this chapter, I propose a method of bearing measurement using frequency dependency on directions. At fist, I explain main proposal, that is the bearing measurement method using frequency, and then propose again on technical methods - how we can use the frequency dependency for measurement.

3.1 Bearing measurement by frequency difference

Frequency of a received pulse is dependent on directions which the echo is coming back from as explained in the previous chapter. The echo pulse shape is also dependent on the distance of propagation due to the dispersive effects of air absorption. However, over short distances of flight less than one or two meters this effect does not make a significant effect on the peak frequency of the spectrum of the echo. Therefore the frequency characteristics can be used for a bearing measurement.

Based on the fact, I propose a method to find the direction which the echo is coming back from using the pulse echo method by calculating the peak frequency of the echo signal. Using this method, it will be able to determine the direction angle to the reflecting object surface from the sensor, using only a single receiver in the pulse-echo method. Thus the relationship between this peak frequency and the direction of the reflecting object can be exploited in practice for determining the bearing over short ranges without resorting to multiple transducer schemes, such as in [Nakajima 88] [Nagashima 92] [Peremans 93].

3.2 Measuring method

Here, I propose how to detect difference of frequency and how to measure the angle using the difference of frequency in ultrasonic sensing for mobile robots applications. Following two proposals make it possible to measure distance are accurate bearing angle using frequency difference rapidly.

3.2.1 Use of zero crossing

With respect to the pulse-echo method, the direction to the reflecting point can be estimated by examining the spectrum of the echo as explained above. However, calculating the power spectrum for each echo is computationally expensive and not suitable for the fast measurement. A faster approach and conceptually similar to examining changes in peak echo frequency is to measure the time difference between the zero-crossing points of the echo. By selecting consecutive zero crossings after the leading edge of the echo, a half cycle period of the echo can be measured as shown in Figure 3.1. This approach also has the important advantage that the algorithm is amenable to simple hardware implementation.

3.2.2 Use of a look-up table

The relationship between the half cycle period and the angle to the reflecting point from the transducer is difficult to derive theoretically. A more pragmatic approach is taken here, that also serves a calibration function. A look-up table can be easily constructed experimentally. For example, The relationship between the half cycle period and the direction to the reflecting point was measured using a plane reflector board at a range of 370 mm from the transducer as shown in Figure 3.2. Here, the signal is ADC sampled at 1MHz. The zero crossing times are estimated by using linear interpolation between samples of differing signs above a noise threshold.

3.3 Summary

In this chapter, I proposed the methods to improve direction accuracy of pulse-echo ultrasonic sensor by using the peak frequency of received echo signals. Since frequency analysis and relationships of frequency and angles are complicated, I also proposed to use the zero-crossing and the look-up table for measuring the direction .

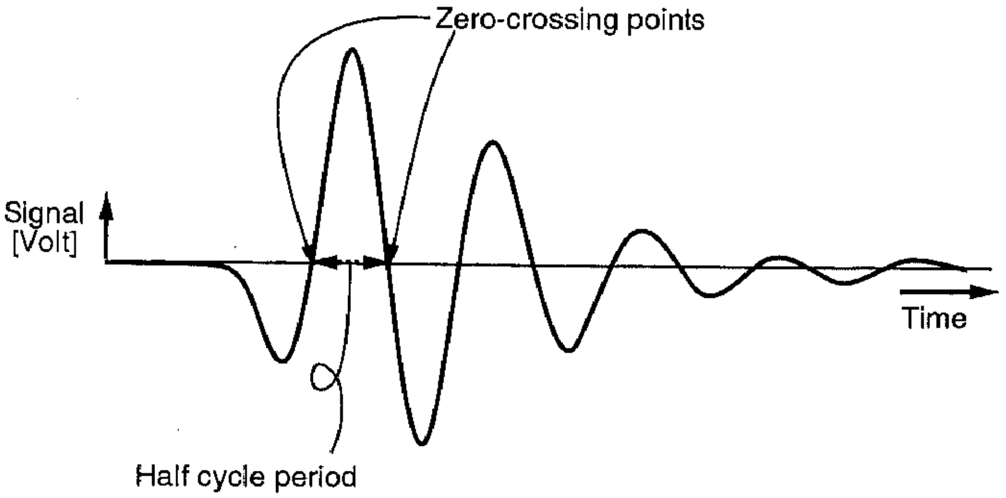

Figure 3.1: An explanation of the zero-crossing points and the half cycle period.

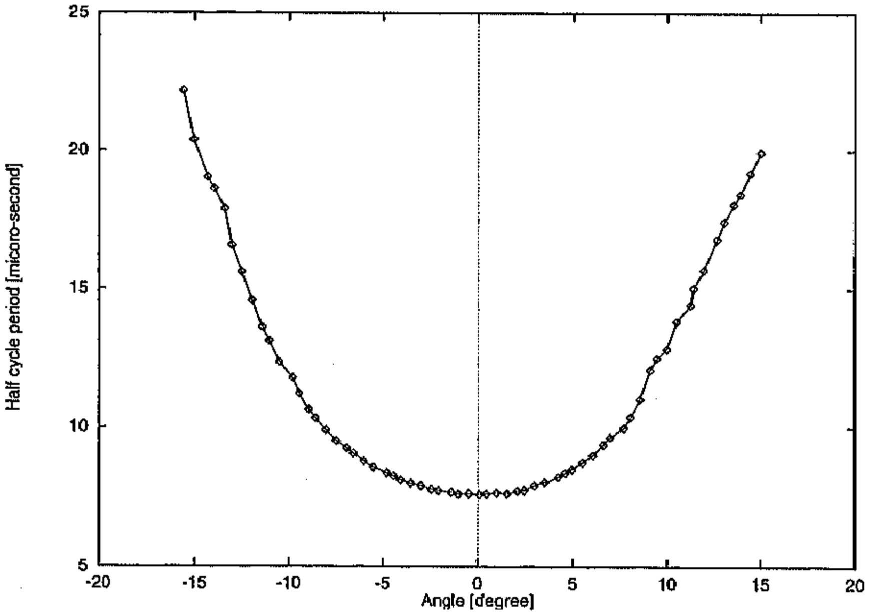

Figure 3.2: Relationships between angle and the half cycle period. (an experimental result)

Chapter 4

Experiments on bearing measurement by a transducer

In this chapter, I describe results of basic experiments of the frequency dependency which is done to verify the theoretical background of the proposed method, and implementation of a bearing measurement system on a robot using proposed method.

4.1 Frequency characteristics

At first, I tested frequency dependency of the received signal on the incident angle, which was explained with linear model through experiments. This was done by using an on-ground setup to confirm possibility of the proposed method. Frequency dependency on directions, targets and distance were investigated, and a model on the direction dependency of ultrasonic transducer was confirmed by using this experimental results, and also it was compared with the linear model.

4.1.1 Experimental setup

Polaroid 7000 Series Electrostatic Transducers [Polaroid 93] without front grill is used via custom designed transmit and receive circuit. The reason of using this transducer is for their wide band characteristics. These transducers are designed for transmitting and receiving ultrasonic wave between 40kHz and 70kHz. In this experiment, for the simplicity of the circuit, the transmitter and receiver transducers were separated by 35mm as shown in Figure 4.1.

A 300V DC power supply provided the transducer biasing. The voltage of the input pulse was 300Vp-p, and the pulse width was 10 microsecond (Figure 4.4). The diagrams of transmitter and receiver circuits are shown in Figure 4.2 [Akbarally 96]. The output of the receiver circuit was put through a high-pass filter, which passes frequencies more than 4kHz, and also through amplifiers.

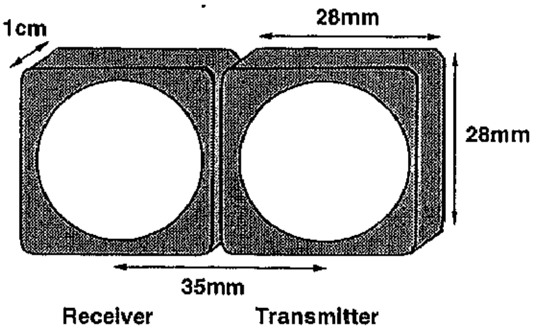

Figure 4.1: Transducers

The full waveforms of the echo signal from the receiver circuit are digitized by a storage oscilloscope(IWATSU DS-8617), whose sampling rate is 500kHz. In this experiment, each waveform was averaged over 30 measurements in order to reduce the noise.

The echo signal was processed as follows in order to detecting its peak frequency:

1. Choose the first three cycles from the averaged echo waveform after it first exceeds a threshold level.
2. Calculate the power spectrum of this signal segment by FFT.
3. Find the peak value of the frequency-power spectrum, and its frequency ω_0.

An air-conditioned indoor environment was used for the experiments. In this experiment, a cylindrical wooden pole 12mm in diameter and a flat surfaced board were used as the reflecting targets. The positions of the targets were measured by hand using a tape measure and a protractor using the parameters ϕ and L as follows. The center of the transmitter and receiver was defined as the origin O (Figure 4.3). ϕ is the angle from the normal direction of the transducer. The normal direction of the transducer is $\phi = 0$. L is the distance between the origin O and the target. The target was moved in the range $\phi = \pm 9$ degrees and $50 < L < 70$ cm, and the echo wave shape was recorded for each target and position.

4.1.2 Direction dependency

An experiment was done to find the relationship of the frequency characteristics and the direction of the target. In this experiment, the cylindrical pole was used as the reflecting target, and the distance L was fixed at 70cm, while the direction ϕ was varied.

An observed echo waveform are shown in Figure 4.5. The calculated power spectra are shown in Figure 4.6, where the horizontal axis shows the frequency and the vertical axis shows ratios of power. The resultant relationship between direction angle and peak frequency is given in Figure 4.7.

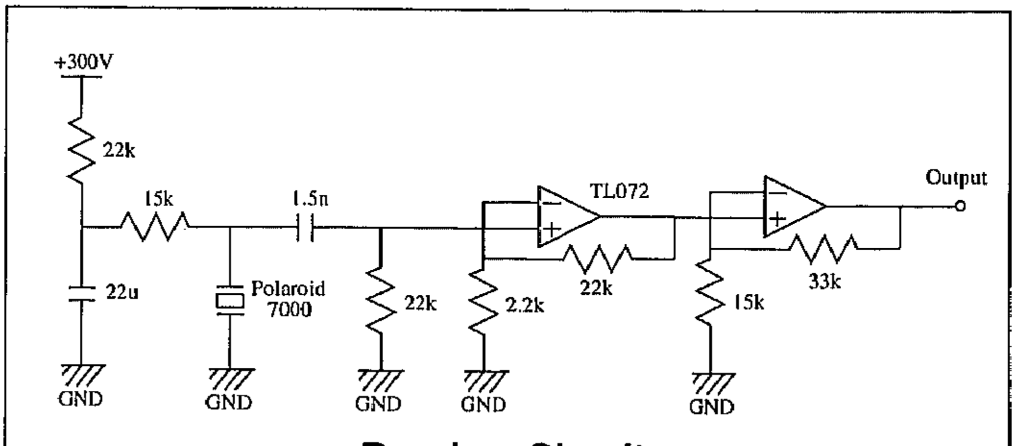

Receiver Circuit

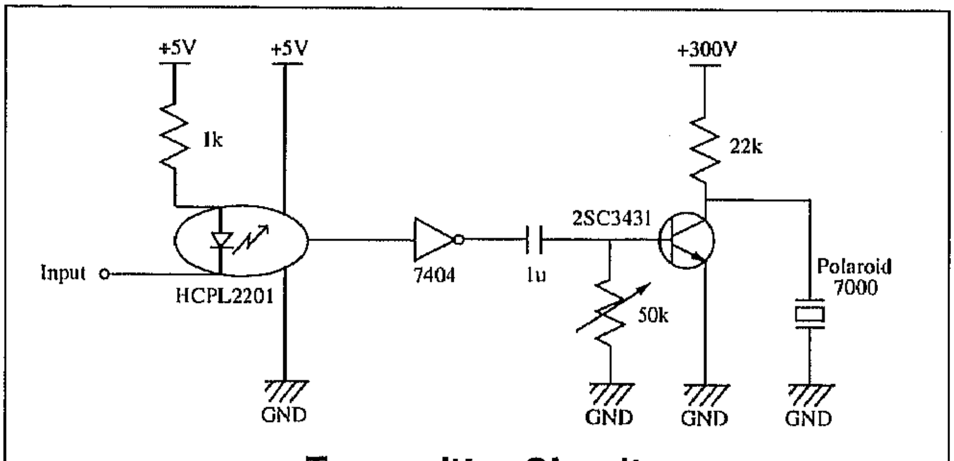

Transmitter Circuit

Figure 4.2: Transmitter and receiver circuit diagrams

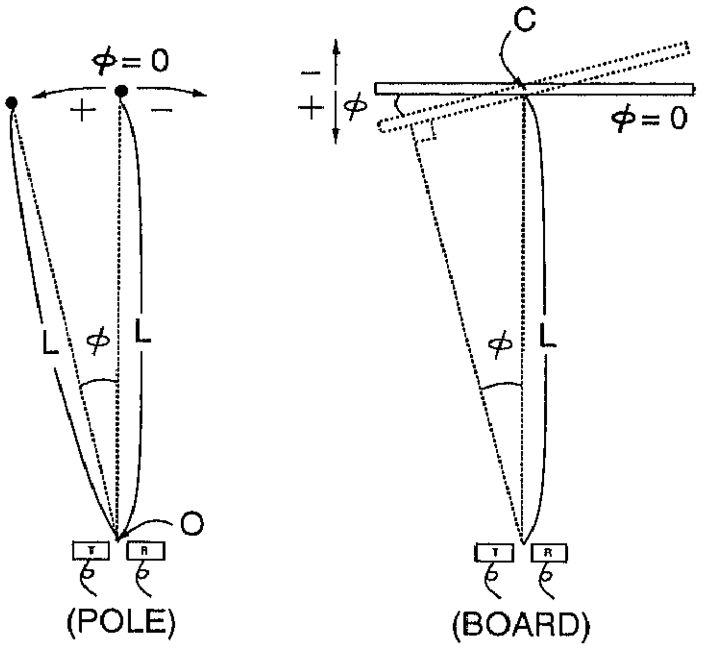

Figure 4.3: Experimental environment

The magnitude of the reflected echo depends on the direction angle of the target ϕ. This is caused by the directivity of the transducers. In addition, depending on ϕ, the peak frequency of the observed reflected echo signal varied from 46kHz to 66kHz in these experiments. When $|\phi|$ is small, the peak frequency of the echo remains high, but as $|\phi|$ becomes larger, the peak frequency tends to decrease. These results verified the possibility of measuring the direction angle of the target from the peak frequency of the echo signal.

4.1.3 Target dependency

To confirm that the peak frequency of the echo does not depend much on the size of object, a flat board was used instead of the pole as the target. In this case, the board was rotated around the center point C where the normal direction of the transducers intersects the board (Figure 4.3).

The echo waveforms from the board are shown in Figure 4.8, where the distance to the target is $L = 70cm$.

Comparing these figures with Figure 4.5, the echo amplitude from the board are much larger than that from the pole, however, the shape of the echoes are almost similar.

Figure 4.10 shows the relationship between the angle and the peak frequency of the echo. From this figure, we can observe that this result is also almost similar to Figure 4.7, which was the result in the case of a cylindrical pole as the target.

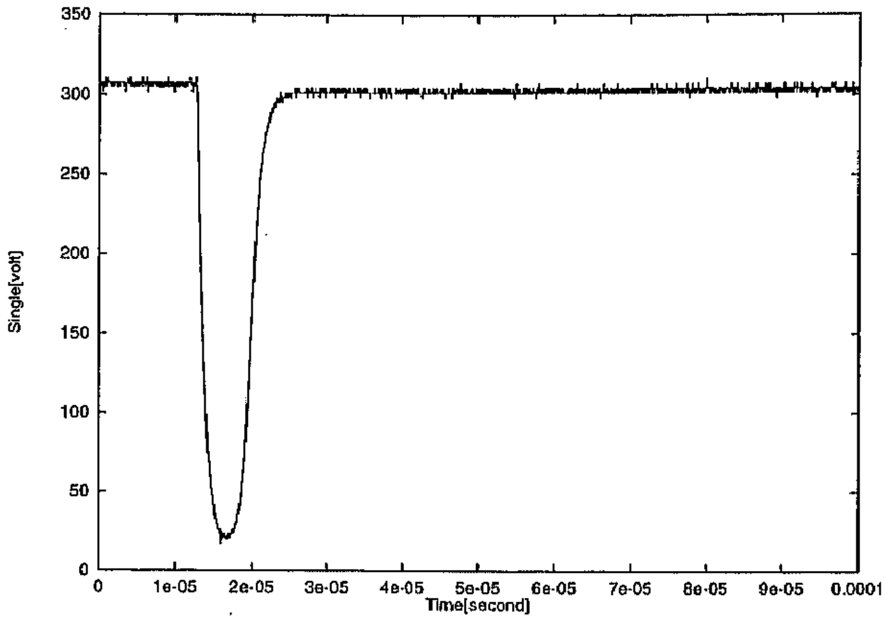

Figure 4.4: Input pulse to transmitter

When angle value $|\phi|$ increases, the peak frequency tend to decrease in both cases of the pole and the board. Also, the echoes look very similar for the same angle value $|\phi|$.

These results support the assumption that only the perpendicular part of board reflects.

4.1.4 Distance dependency

The distance L, from the transducers to the target, was changed to 50cm, 60cm and 70cm (Figure 4.28), and the peak frequency of echo was found. In this experiment, the cylindrical pole of 12mm in diameter and the flat board were used as targets. Only one side was measured since the direction characteristics were symmetrical.

The relationship between the angle and the peak frequency when the distance L was changed is shown in Figure 4.11.

This graph shows that the peak frequency tends to decrease, when the angle value $|\phi|$ increases if the distance L is changed. Therefore the distance L is scarcely related to the change of the peak frequency in the direction of the target.

As the result of these experiments, there is an experimental relationship between the amplitude of the echo and the direction or the size of target. However, there is almost no relationship between the peak frequency and the size of the object or the distance.

As the result, we can conclude that the peak frequency of the echo is predominantly affected by the direction to the reflecting target.

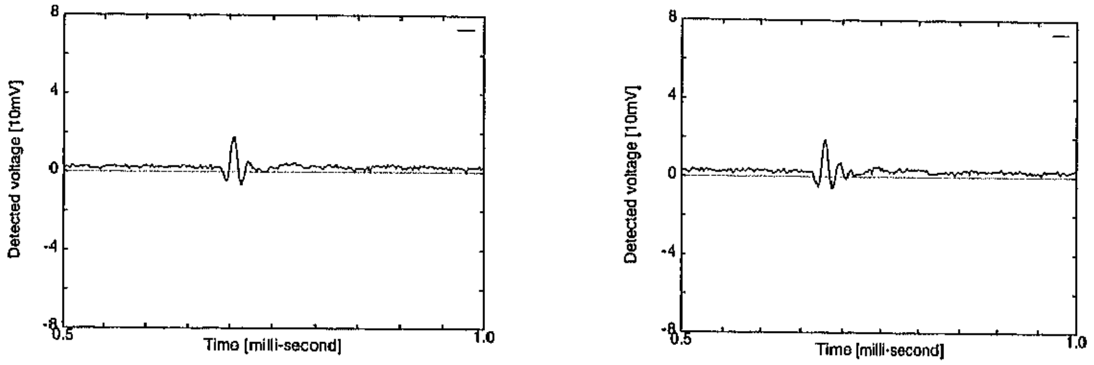

(a) -9 degrees

(f) 9 degrees

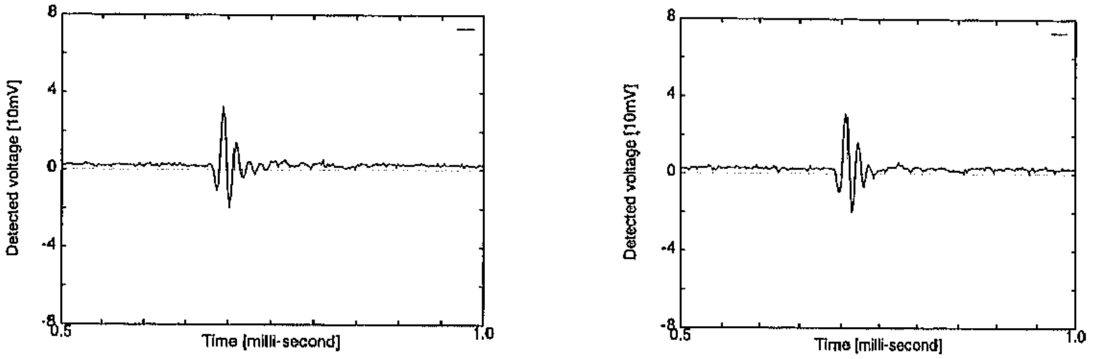

(b) -6 degrees

(g) 6 degrees

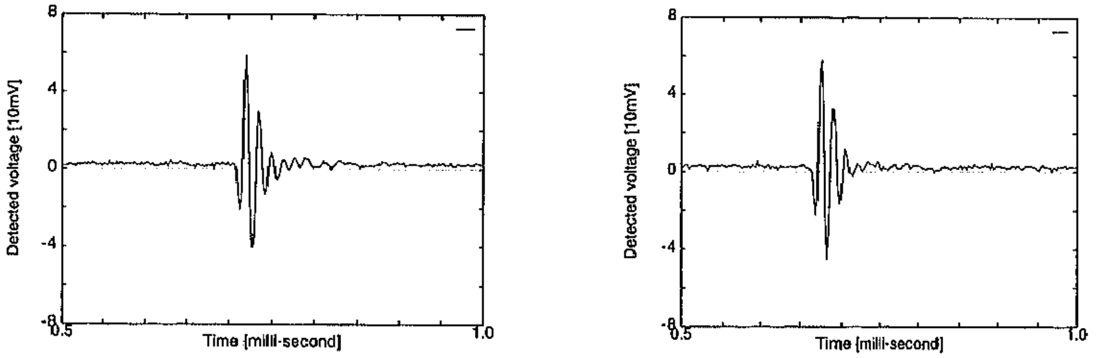

(c) -3 degrees

(h) 3 degrees

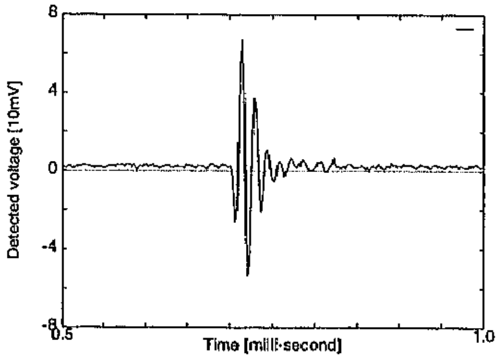

(e) 0 degree

Figure 4.5: Echo signals from a pole

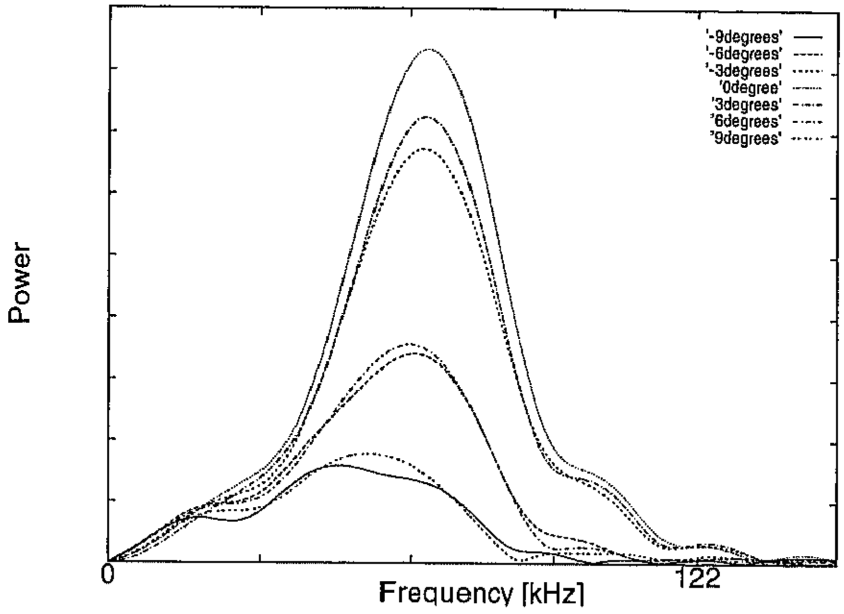

Figure 4.6: Power spectrum of echo from a pole.

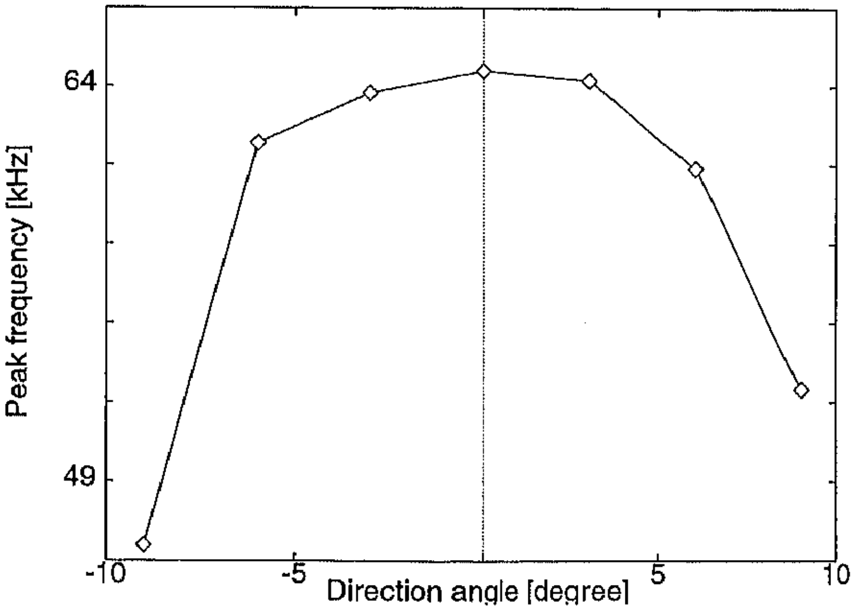

Figure 4.7: Relationship between direction angle and peak frequency of echoes from a pole.

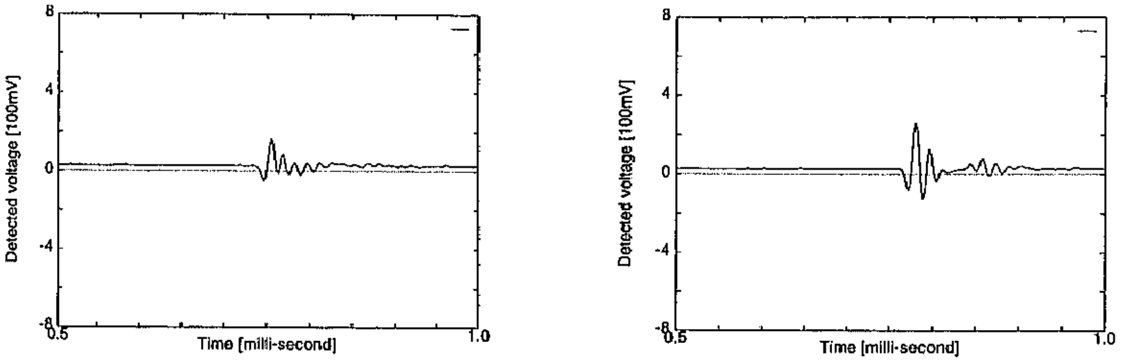

(a) -9 degrees

(f) 9 degrees

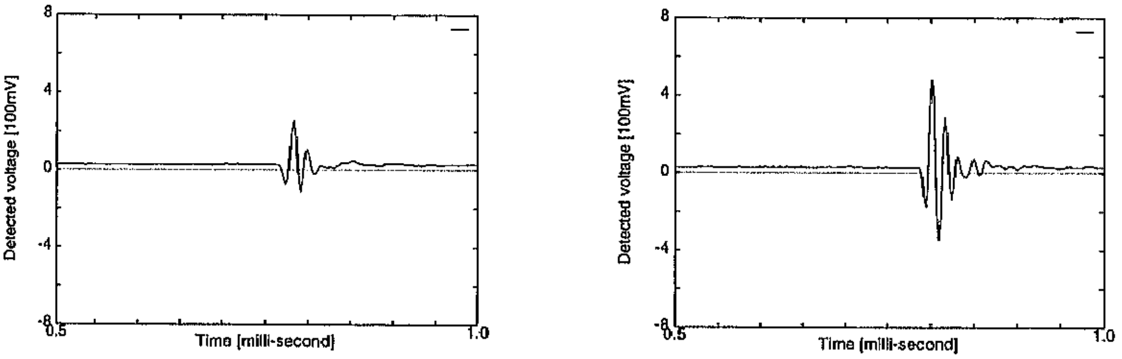

(b) -6 degrees

(g) 6 degrees

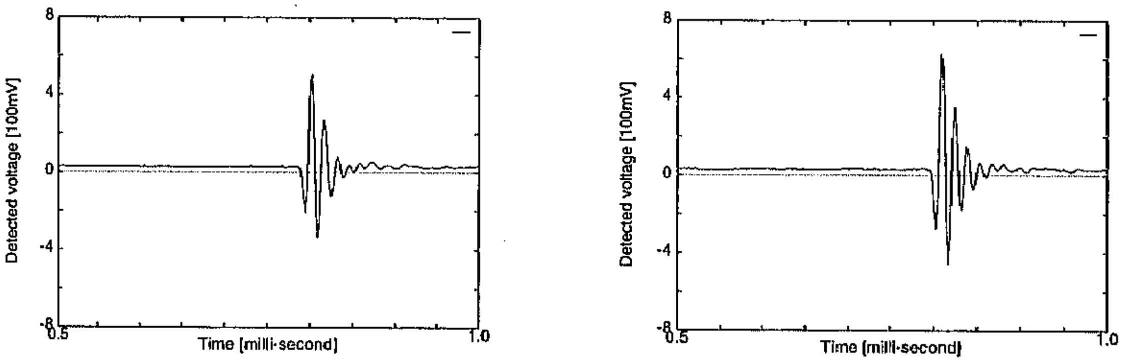

(c) -3 degrees

(h) 3 degrees

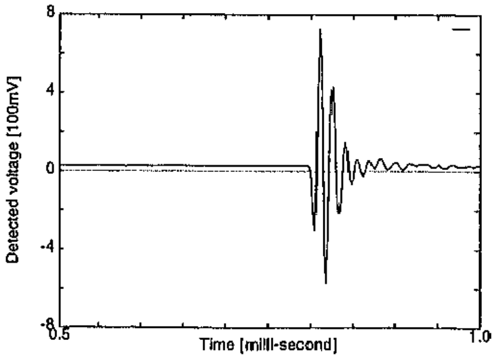

(e) 0 degree

Figure 4.8: Echo signals from a board

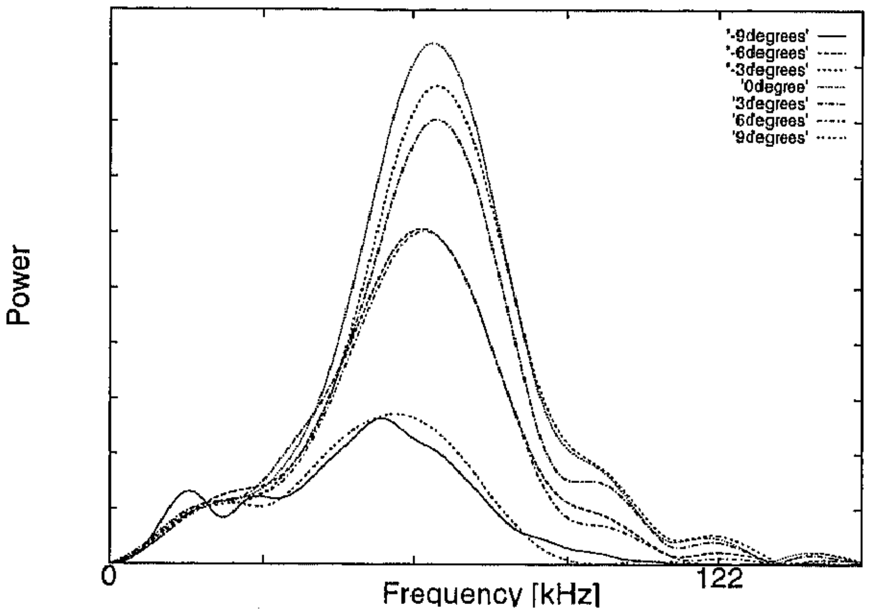

Figure 4.9: Power spectrum of echo from a board

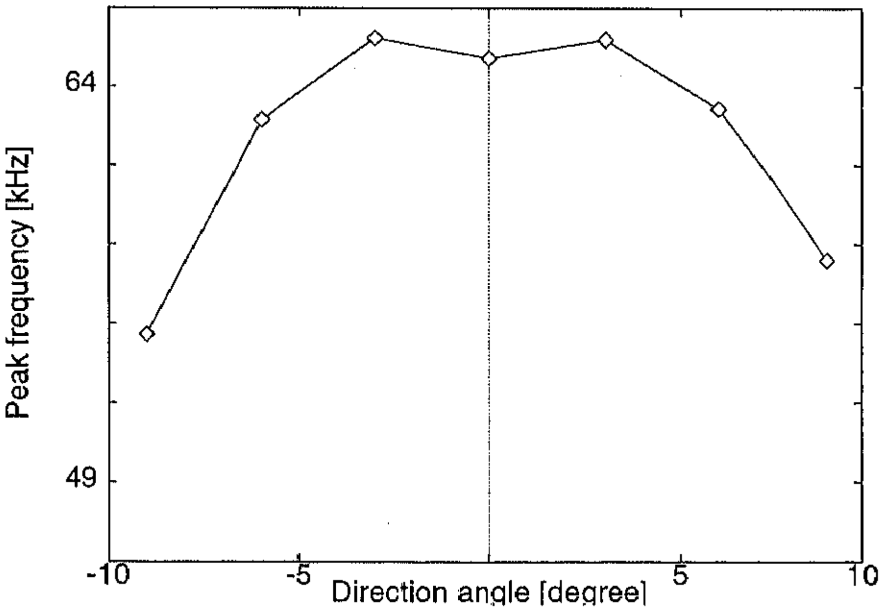

Figure 4.10: Relationship between the direction angle ϕ and the peak frequency of echoes from a board.

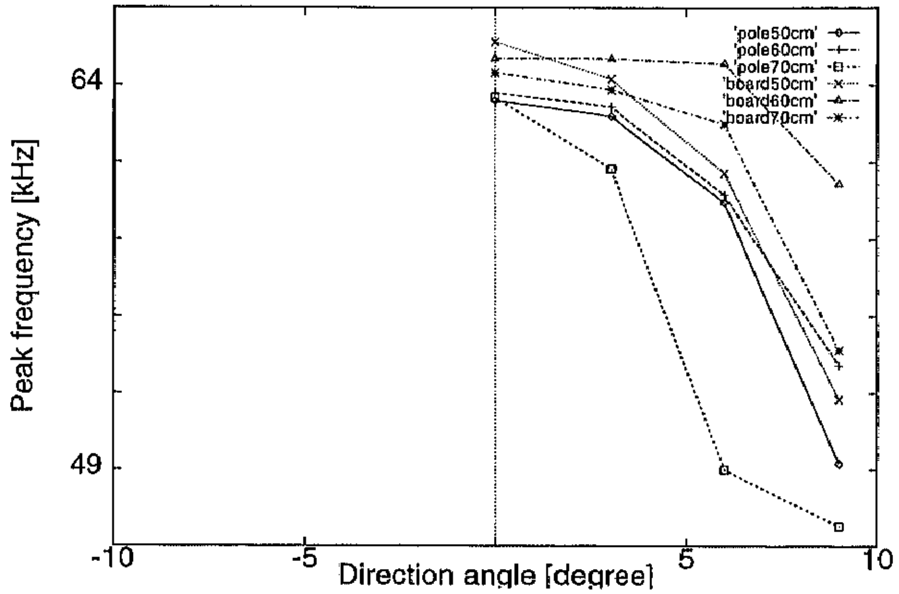

Figure 4.11: Relationship between direction angle ϕ and the peak frequency of echoes from a pole and a board depending on the distance L.

4.1.5 Comparison with the mathematical model

The experimental result of the angle dependency with the power spectrum of the echo which was reflected from the plane board is shown in Figure 4.12(a). And also the power spectrum which was calculated with the mathematical model of directivity of transducer with the experimental result at the angle $\theta = 0$ is shown in Figure 4.12(b). Figures 4.12(a), 4.12(b) give good agreement and they show the adequacy of angle dependency model of the transducer.

4.1.6 Discussion on frequency characteristics

Those experimental results showed peak frequency depends on directions of the reflections is coming back from. According to those results, we could confirm that the peak frequency is very good information for detecting the accurate direction which the echo is coming back from.

4.2 Evaluations

The proposed bearing measurement method was implemented on a mobile robot. Using this method, at first, I verified the proposed methods using zero-crossing and look-up table and evaluated its accuracy. After that, the proposed method was compared with the some other methods which can measure the bearing angle accurately than the beam-width.

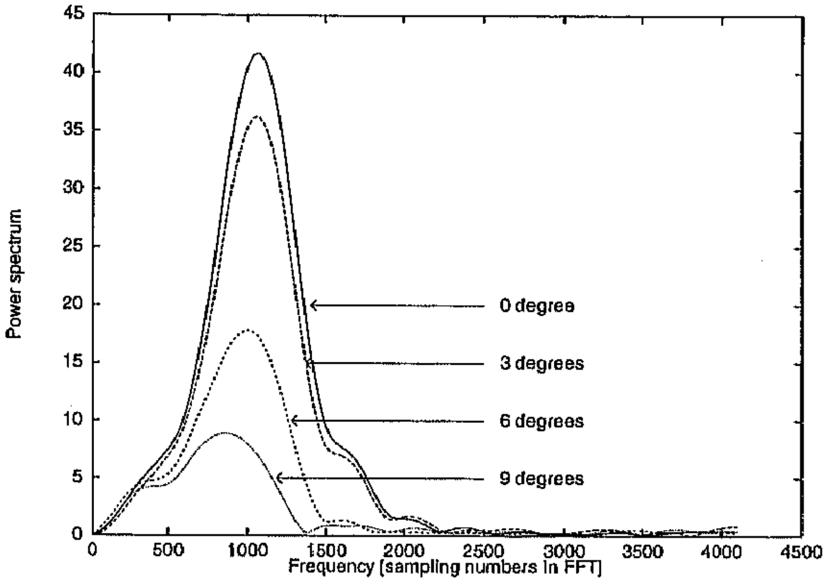

(a) experimental results

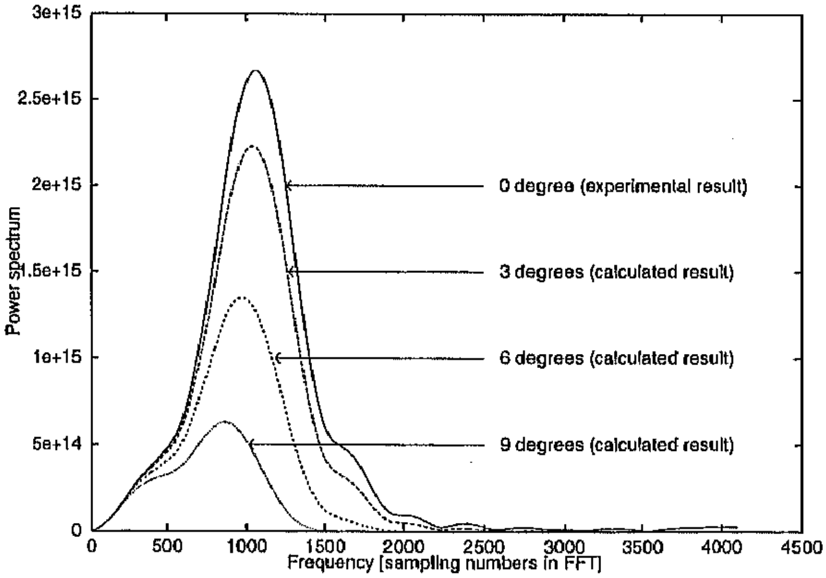

(b) calculated results

Figure 4.12: (a)Power spectrum of echo in the real experiment. (b)Power spectrum of echo in the model.

4.2.1 Setup

Hardware

A Polaroid 7000 Series electrostatic transducer [Polaroid 93] of which the front grill was removed is interfaced to a single board computer via custom designed transmit/receive circuits. The transmit/receive circuit diagram is shown in Figure 4.13 [Akbarally 96].

Transmitting is performed by giving a 10 microsecond 0 V pulse on a 300 V biased voltage to the transducer. This produces a short acoustic pulse of the order of 80 microseconds duration. The receiver circuitry has sufficient signal-to-noise ratio to receive echoes from plane targets out to approximately 8 meters range. The full echo waveform is captured via a 12bit ADC sampling at 1MHz. A geared DC servo motor is used to control the panning angle and/or speed of rotation.

Half-cycle period

The shape of the reflecting object should effect the half-cycle period which is shown in Figure 4.14. The half-cycle period can be measured by selecting zero crossings after the leading edge of the echo. The effect of the reflecting object shape to the half-cycle period is compared using a plane and an convex corner as the reflecting object. The half-cycle period was measured at each direction in the environment shown in Figure 4.15. The results of plane and convex corner are shown in Figure 4.16. They show that the effect of the direction dependency are much bigger that that of the reflecting object.

Look-up table

At the first step, a look-up table which gives relationships between bearing angles and half-cycle period, was made as follows.

1. Put a wide plane board in front of the transducer (Figure 4.17).
2. Rotate the transducer direction to the board in the direction which the reflecting point is inside of the directivity. Take the data of the half cycle period at each 0.5 degrees.
3. Repeat the measurement of the half cycle period five times at each direction.
4. Select the middle value of the five times measurement as the measured value at the each direction (Figure 4.18).
5. Pass the all selected data through a median filter.
6. Extract the data which is inside of the directivity (Figure 4.19).
7. Fit a ninth order polynomial function to the reciprocal of the data using least squares (Figure 4.20).
8. Make a table of the relationship.

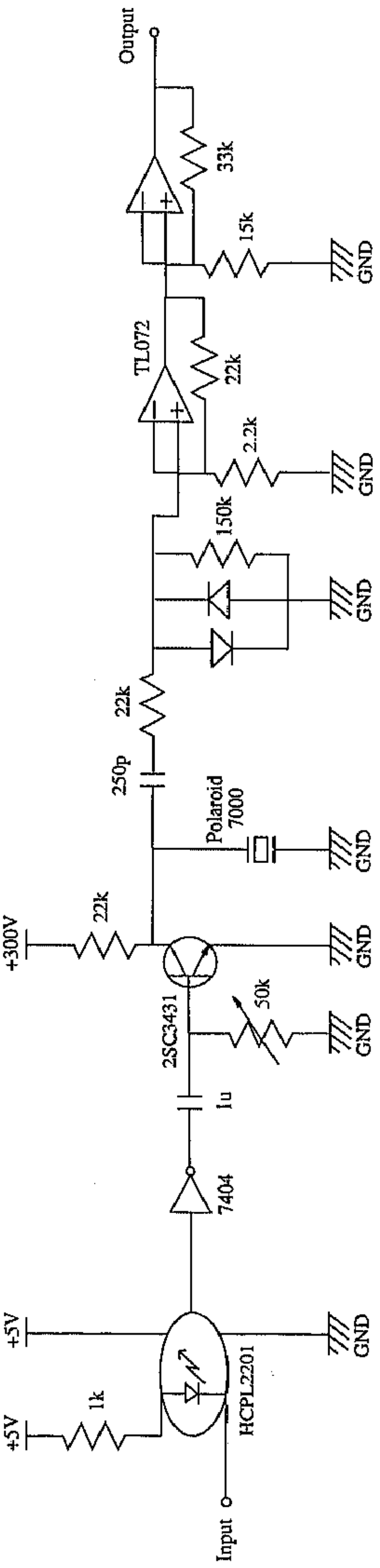

Figure 4.13: Transmit/Receive circuit.

The reason why the measurement is repeated five times at each direction is to minimize the effect of the noise. Between the samples which were extracted using the threshold were linear interpolated for detecting the accurate zero-crossing point.

4.2.2 Results

At previous sections, it has been confirmed that center frequency is not much depending on the other factors, shape of the reflecting object, comparing bearing angle dependency. Here, using this proposed method, measured results at different distance are evaluated and compared with previous researches.

Accuracy

Effect on difference of distance to the object is evaluated by real experiments. At first a look-up table was made based on the half-cycle period data measured at distance 42cm to the object. For avoiding symmetrical shape of the look-up table, a bias angle, 10 degrees, was set and defined as zero-degree of the measurement, and only half beam width was used for the measurement. When a reflecting point comes out of the assumed area of beam width, it fails measurement.

Placing a board at distance 50cm and 80cm in each experiment bearing angle to reflection points were measured. For changing direction to the reflecting point, the transducer was rotated and a single transmit/receive cycle measurement was done at each direction. The measured angle data at the distance 50cm and 80cm are shown in Figure 4.21 and Figure 4.22, respectively. It successfully measured accurate bearing angle to the reflecting point. Accuracy is ±1 degree and it is sufficient for use by mobile robots. The results show that the proposed system can achieve accurate bearing angle measurement and the difference to the object does not much effect the measurement.

Comparison with previous research

Two other approaches for measuring target bearing are compared with the approach presented here. The first approach employs multiple receivers mounted horizontally and uses time differences of leading edges of echoes from the receivers to measure the angle to the reflecting point from the transducer [Nagashima 92]. The plot of measured angles to a reflecting point at differing pan angles is shown in Figure 4.23.

The second approach uses a single transducer and a template matching approach [Kleeman 95]. A template is a pulse shape for a particular incidence angle that is generated from modeling the impulse response of the transducer due to differing arrival directions. By using a normalized cross correlation of the echo pulse with a set of templates with a range of angles, the best three matching templates can be selected. A parabola is fitted to the three correlations as a function of angle and the angle corresponding to the maximum of this parabola is used as the bearing estimate. The measured angle for a panning sensor to the reflecting point using

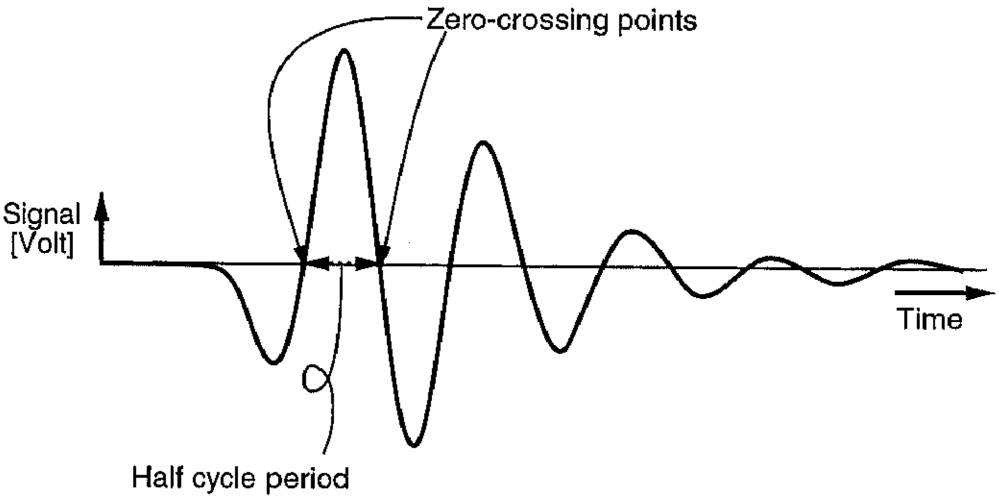

Figure 4.14: The explanation of the zero-crossing points and the half cycle period.

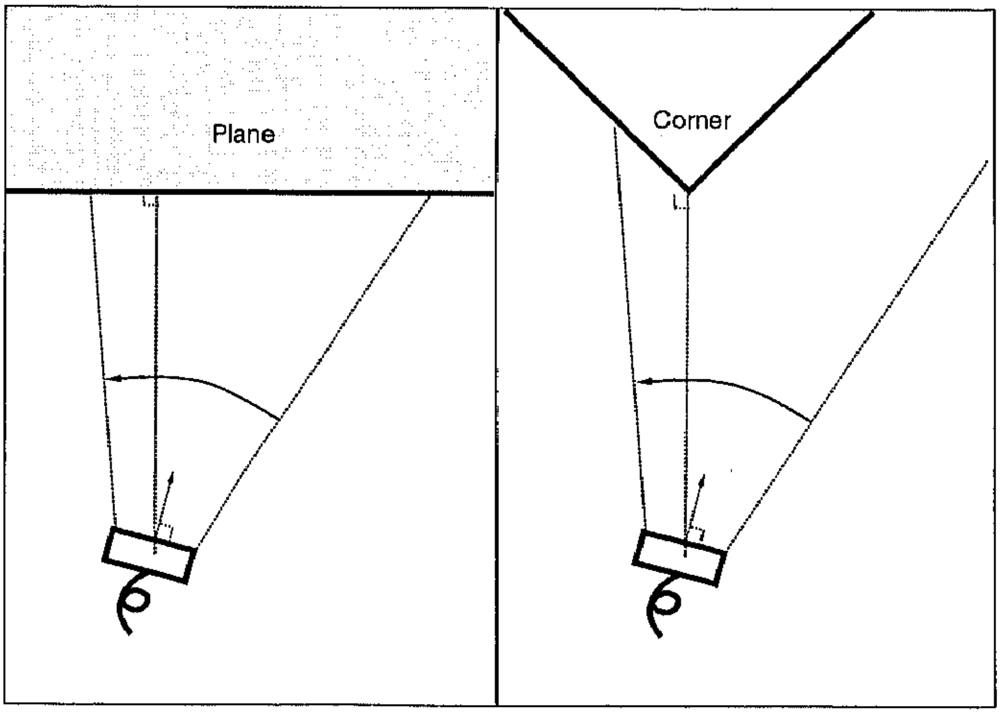

Figure 4.15: The experimental environment for the comparison of the effect by the reflecting object.

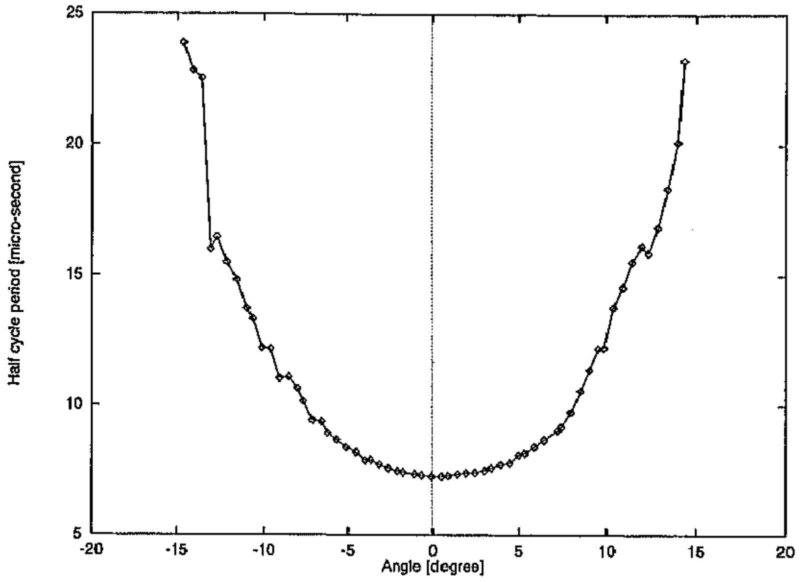

(a) from the plane

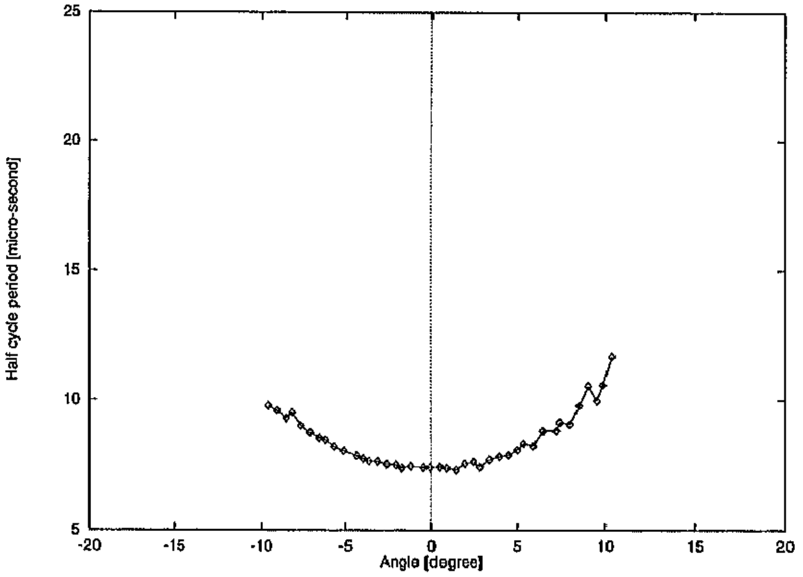

(b) from the corner

Figure 4.16: The relationship between angle and the half cycle period of the echo (a) from the plane, (b) from the corner.

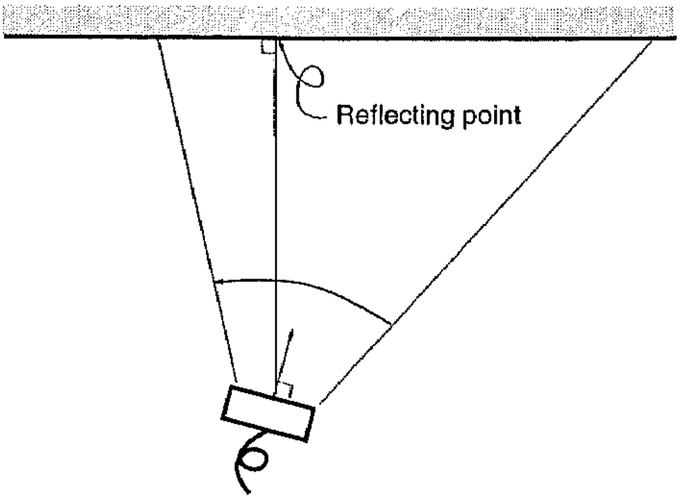

Figure 4.17: Environment for making the look-up table.

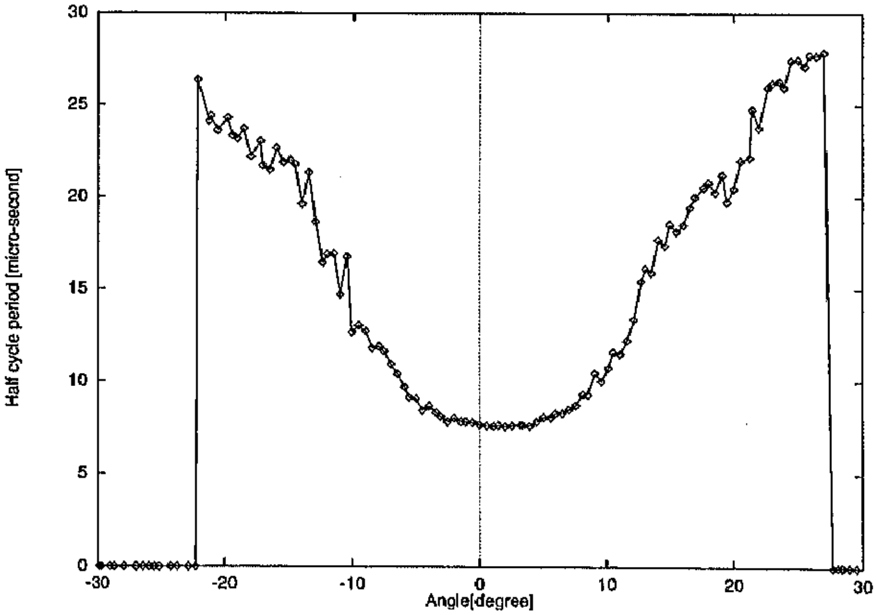

Figure 4.18: The base data of the look-up table - the data was the selected middle value of five times measurement in each direction.

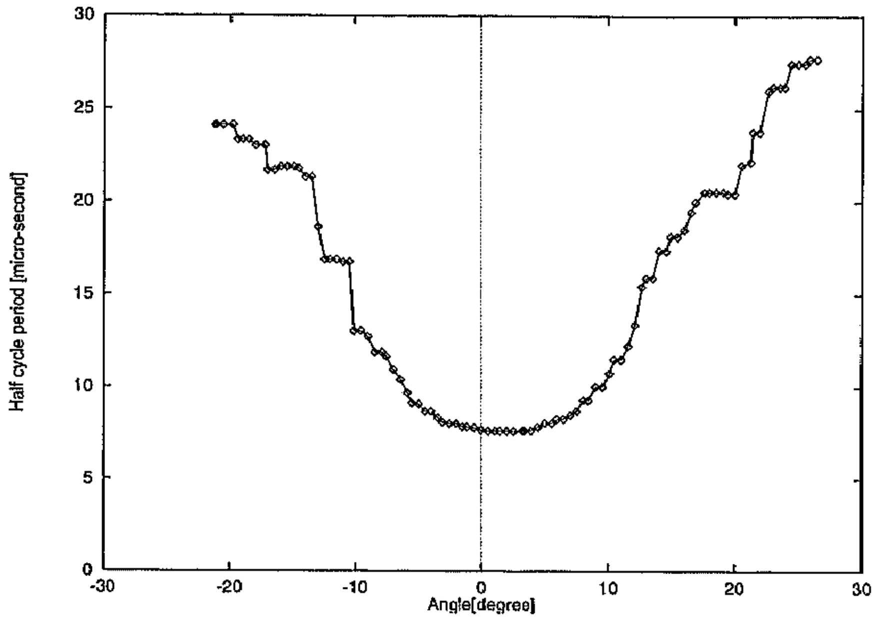

Figure 4.19: The base data of the look-up table - the data was passed median filter.

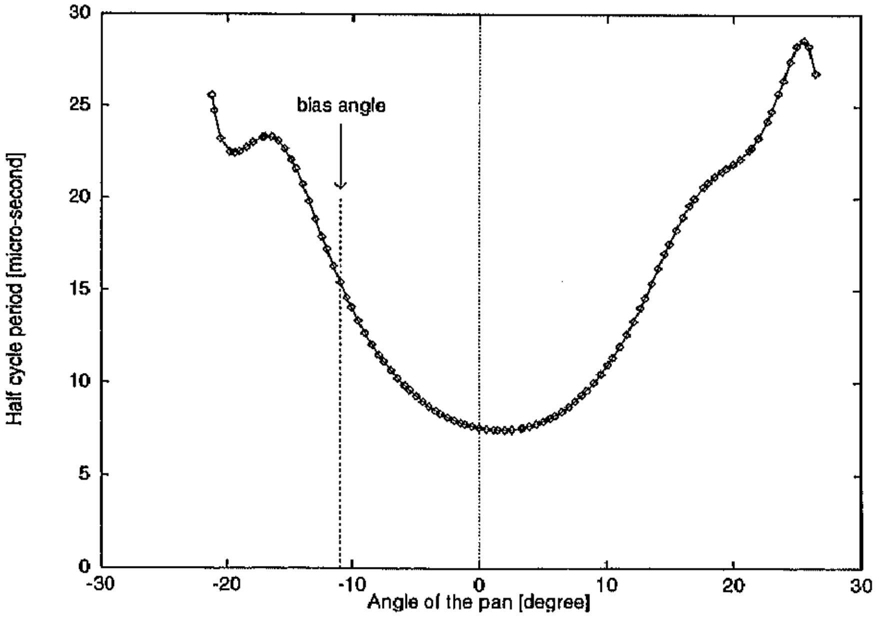

Figure 4.20: The look-up table whose reciprocal was fitted to a ninth order polynomial.

the template matching is shown in Figure 4.24 [1]. While this result provides a reasonable good bearing accuracy, but this template matching method requires more computation and memory.

Compared to these methods, from the point of view of the accuracy and measurable angle, the proposed method (Figure 4.21 and Figure 4.22) is slightly less accurate, and the measurable range in angle is also slightly narrower. However those compared approaches require more hardware or complicated processing and processing time. The proposed method has advantages in the simplicity of hardware, with just one transducer and less processing time.

---

[1] This is an experimental result done by Prof. Lindsay Kleeman.

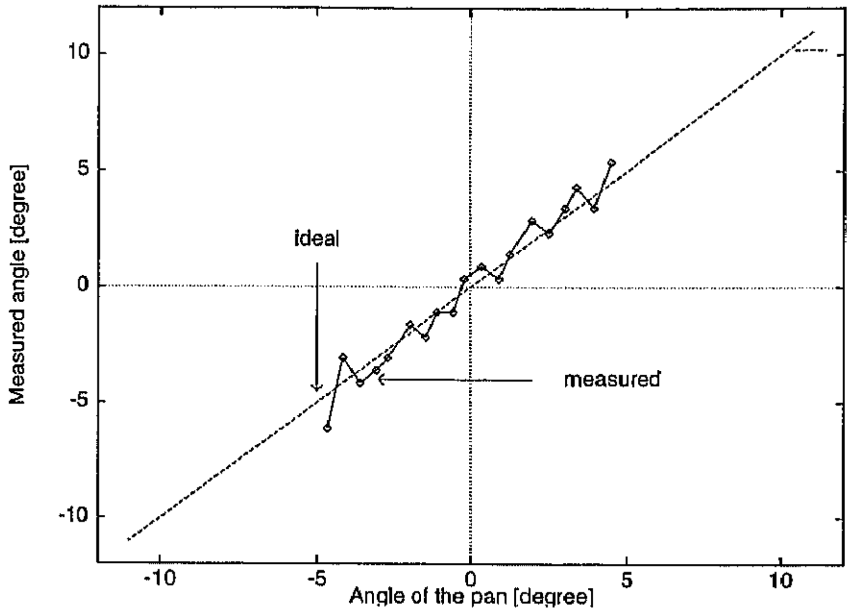

Figure 4.21: Measured angle by the zero-crossing method using a plane reflector at distance 50 cm. Zero degrees in angle corresponds to a bias angle of 10 degrees.

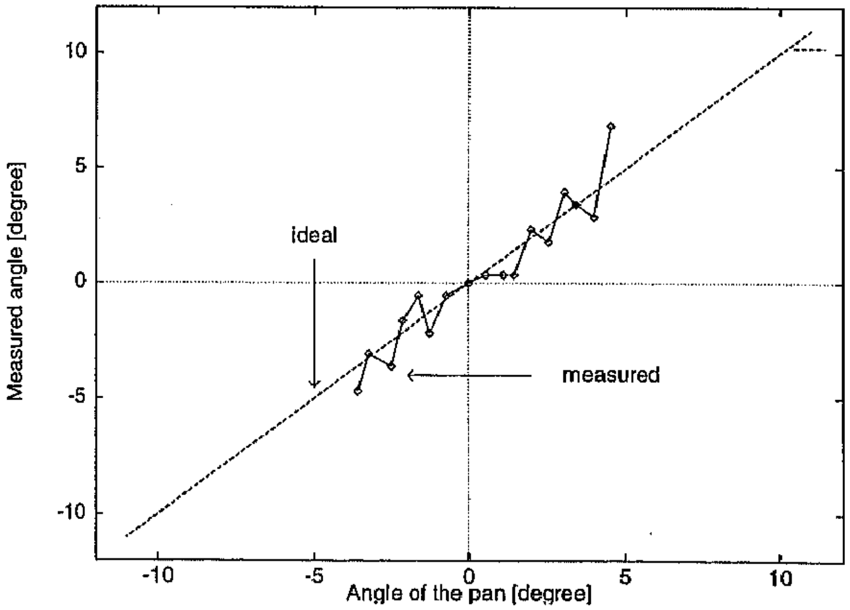

Figure 4.22: Measured angle by the zero-crossing method using a plane reflector at distance 80 cm. Zero degrees in angle corresponds to a bias angle of 10 degrees.

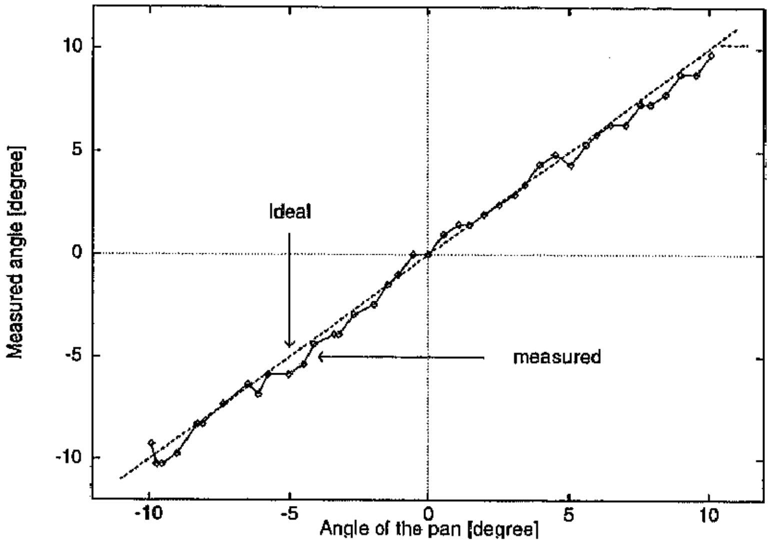

Figure 4.23: Measured angle by using two receivers and the arrival-time difference [Nagashima 92] using a plane reflector at distance 50 cm.

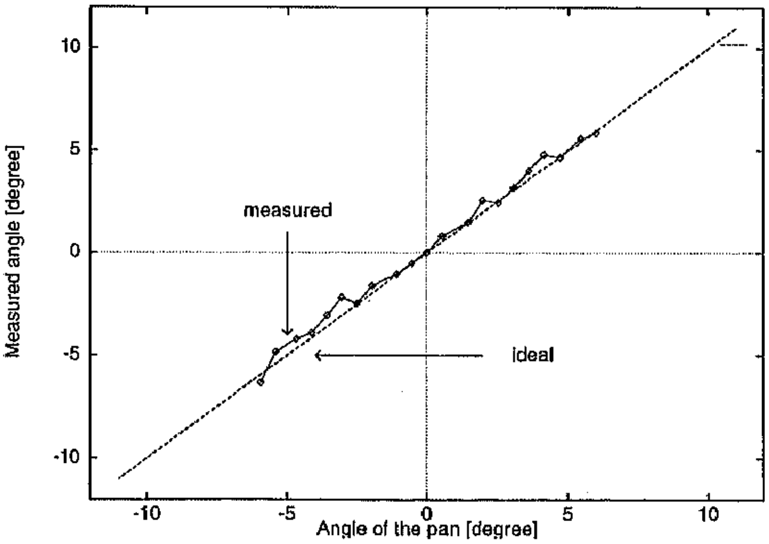

Figure 4.24: Measured angle by the template matching method [Kleeman 95] using a plane reflector at distance 50cm. Zero degrees in angle corresponds to the bias angle of 12 degrees.

4.3 Application to the mobile robot

Experiments on a real robot were performed to examine usefulness of the proposed method in a real environment.

If the robot can measure the direction of reflecting points accurately, it should be possible to follow a wall using only this angle data. Therefore the robot was made to follow a box only using the measured angle data of the reflecting points.

4.3.1 Robot

The robot which was used in this experiment is shown in Figure 4.25, and its system architecture is shown in Figure 4.26. The size of this is 560mm in diameter.

The communication backbone of the robot is an ISA AT Bus. Through it, a 485DX2-66MHz board controls a custom made sensor control card and a motion control card. The motion control card provides PID control to the motors of pan tilting and locomotive wheels driving. For every motor an encoder provides feedback information. The servo period of those control are 400 microsecond for each loop. The software control of the robot is performed with a real-time multitasking operating system.

The robot has five transducers on the pan-tilt mechanism on the top, but only the center transducer was used in this experiment. A geared DC servo motor is used to control the panning angle and/or speed of rotation. The ADC sampling is at 1MHz.

4.3.2 Processing flow

At first, the pan of the sensor set at the bias angle and start measurement (Figure 4.27). The pan angle is fixed at the bias angle on the robot during the motion. In the measurement, the robot can detect the difference from the bias angle. And then the measured angle is used as the coefficient of the acceleration in the locomotion feed back. In case the robot fails to measure the angle, it is just ignored and treated as the same as if no difference were measured.

For controlling the nonholonomic mobile robot with PWS (Powered Wheel Steering) mechanism, a simple direction control feedback loop was installed as follows

The reference velocity of right ω_r and left ω_l wheels are given as

$$\omega_r = \omega_s - k\theta \tag{4.1}$$

$$\omega_l = \omega_s + k\theta \tag{4.2}$$

where ω_s is the wheel angular velocity for the desired translational velocity of the robot (That is 0.1 m/second), θ is the bearing angle to the nearest points measured by proposed ultrasonic sensing, and k is the feedback gain suitably chosen at the experiment.

Since, the translational velocity and angle velocity of the robot are expressed as

$$\begin{bmatrix} V \\ \omega \end{bmatrix} = \begin{bmatrix} \frac{R}{2} & \frac{R}{2} \\ \frac{R}{T} & -\frac{R}{T} \end{bmatrix} \begin{bmatrix} \omega_r \\ \omega_l \end{bmatrix} \tag{4.3}$$

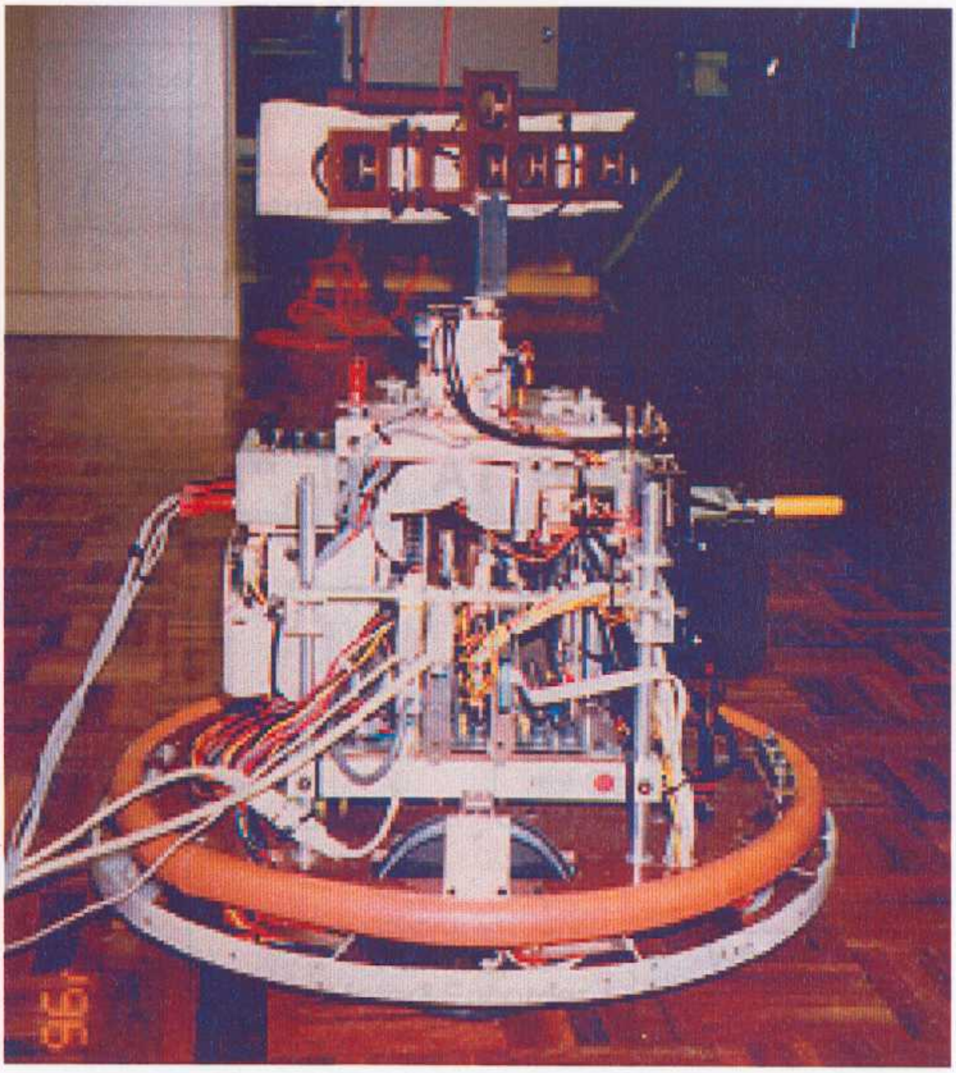

Figure 4.25: The robot which was used in this experiment.

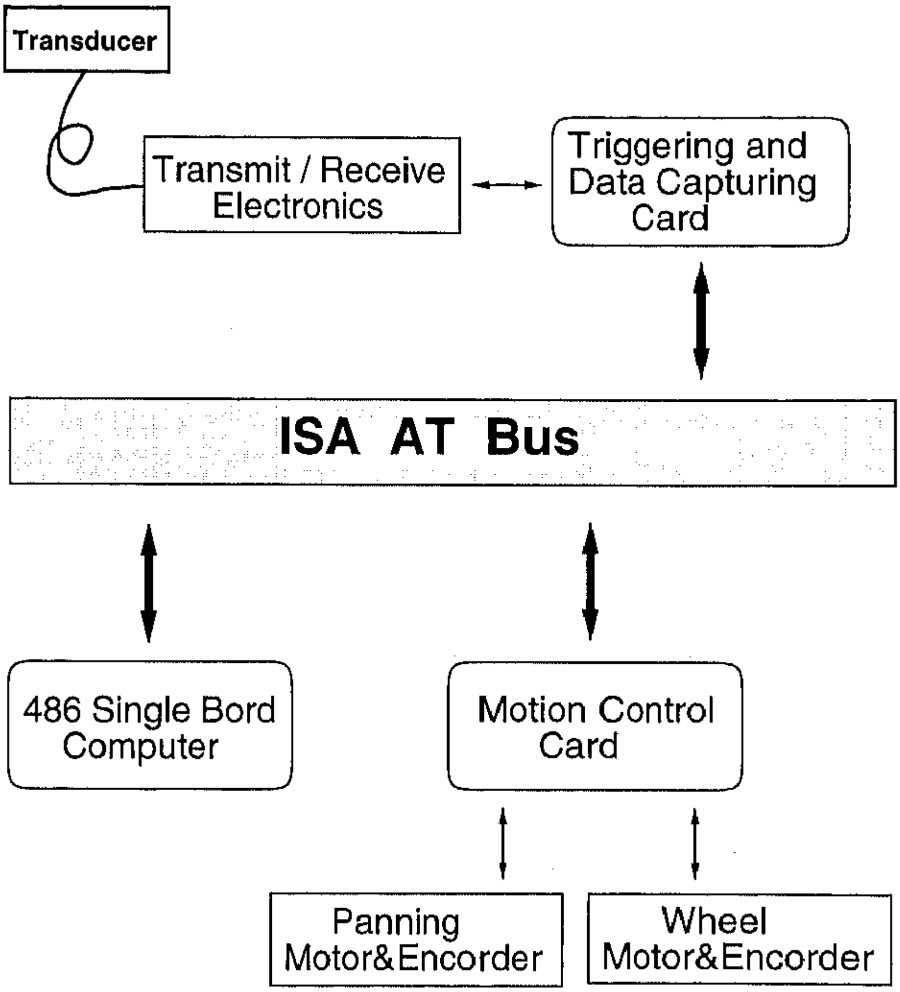

Figure 4.26: Robot system architecture.

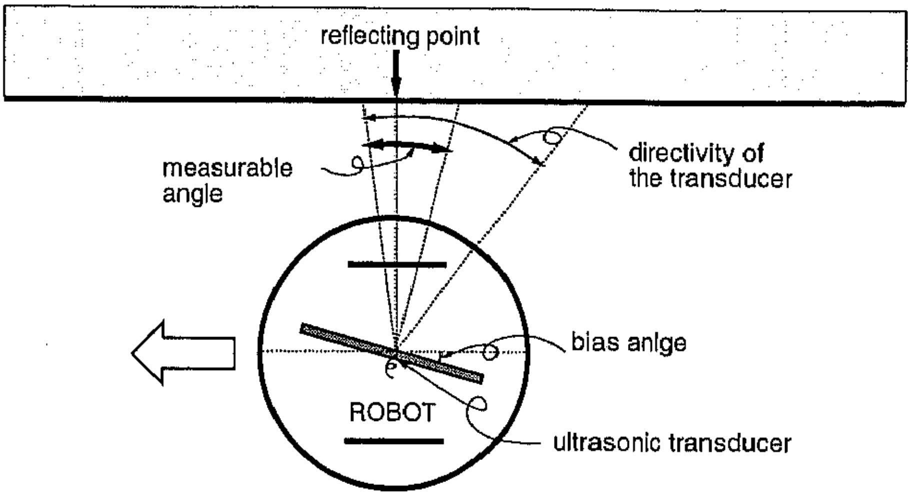

Figure 4.27: The relationship between the robot itself and the pan angles.

where, R is the diameter of wheels and T denotes the distance between wheels.

The resultant velocity of the robot are as

$$\omega = k\frac{R}{T}\theta \tag{4.4}$$

$$V = 2R\omega_s = 0.1m/sec \tag{4.5}$$

Giving the feedback as shown, the robot is supposed to move with constant forward speed keeping the same distance to the object, when sufficient accuracy of angle data and sufficiently fast sampling rates are guaranteed in the measurement.

4.3.3 Experimental environment

The robot is set in front of the box which is $610 \times 410 \times 820mm$. The corner angles of the box were changed and the motion of the robot was recorded (Figure 4.28).

4.3.4 Experimental result

The robot could follow the box which has different angles of the corner, and the experiments were successful.

The measured angle to the reflecting points and distances in this experiment are shown in Figures 4.29 and 4.30. Figures 4.29 is the result using the box which is the right angle corner. Figures 4.30 is the 110 degrees and 70 degrees. The distance data are not used in the motion feed back.

However in the experiment which was done with the box of 110 degrees and 70 degrees corners, the robot failed to follow the fourth corner which is 70 degrees, because the echo was

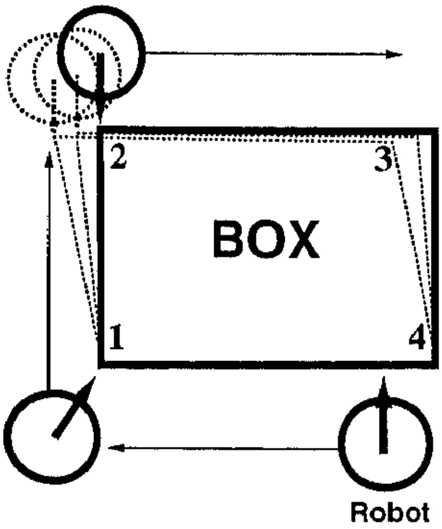

Figure 4.28: Experimental environments for the following the box.

undetectable from that corner. In sharper the corner, the greater the possibility of failure to detect an echo.

This experiment also shows that if the accurate direction to the nearest point on the object is detected, the robot will be able to follow the surface of object, by simply keeping the motion direction to be right angle to that point.

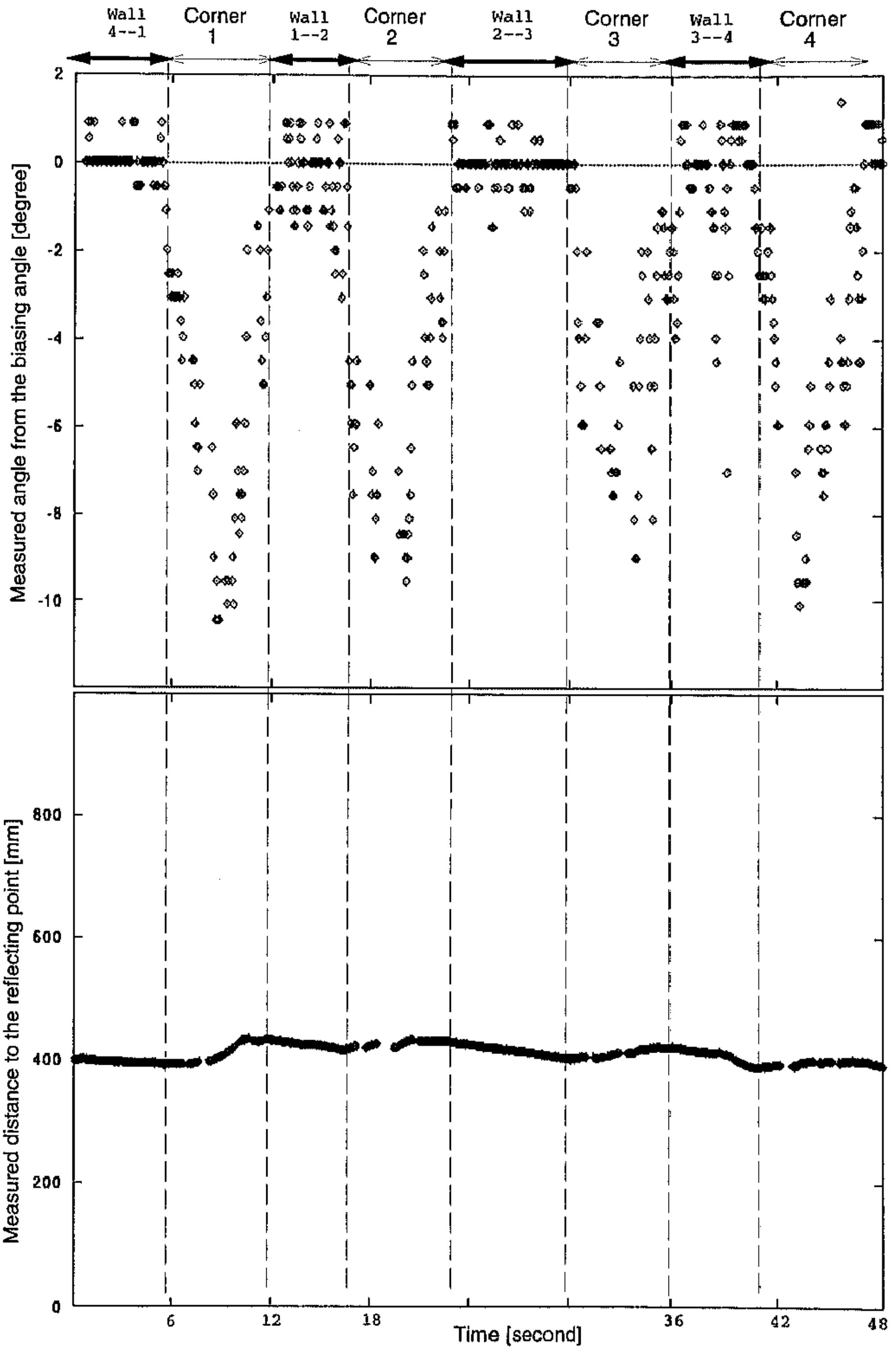

Figure 4.29: Measured angle and distance data in the experiment using the right angle corner box.

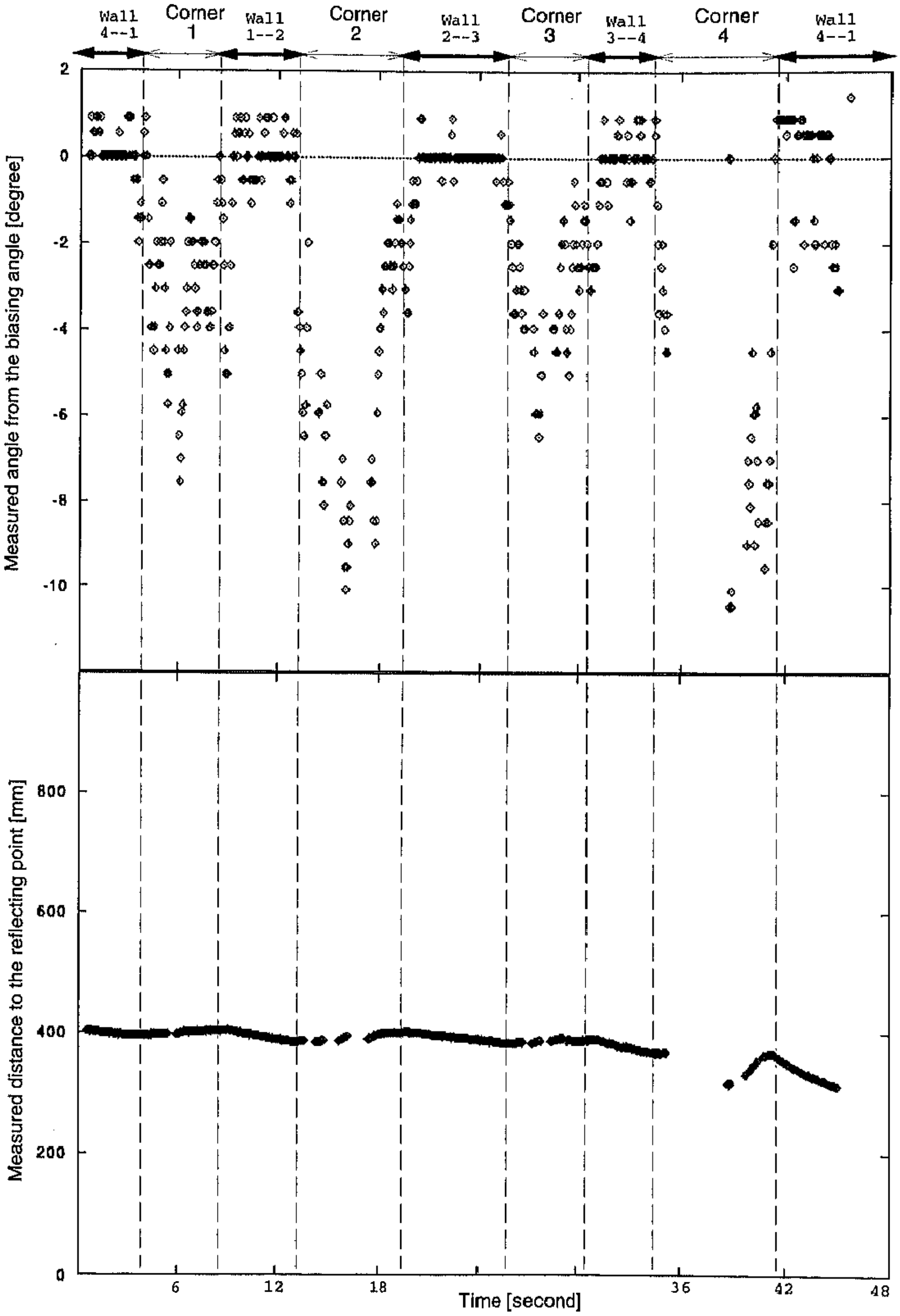

Figure 4.30: Measured angle and distance data in the experiment using the box whose corners are 70 and 110 degrees.

4.4 Discussion on the experiment

I have done the basic experiments of frequency dependency to show capability of the proposed bearing measurement method, and implemented the proposed method on the robot.

At first, I tested frequency dependency explained with mathematical model through experiments using the on-ground setup. According to the experimental results of frequency dependency on direction, target and distance, it could confirm that shape of the target and distance to the target do not much influence on frequency, comparing the frequency dependency on direction. The experimental results of frequency dependency on direction was also confirmed comparing with the mathematical model. Accordingly, those experimental results indicated that it is possible to measure bearing angle using the frequency dependency on direction.

The proposed bearing measurement method was implemented on a mobile robot. The proposed methods was evaluated in accuracy and compared with the some other methods which can measure more accurate bearing angle than the beam-width of the transducer. The proposed method successfully measured accurate bearing angle to the reflecting point. The accuracy was ± 1 degree and it was sufficient for using on mobile robots. Comparing with other methods, with respect to the accuracy and measurable angle, the proposed method is slightly less accurate and the measurable range in angle is also slightly narrower. However, those compared approaches require more hardware or complicated processing and processing time. The proposed method has advantages in the simplicity of hardware, with just one transducer and less processing time.

The experiments wall following with a real robot which implemented the proposed method were done. The robot could follow the wall successfully, and it showed the usefulness of the proposed method.

Chapter 5

Conclusion to bearing measurement by a transducer

In this part, I have proposed the new fast and accurate bearing angle measurement method by a single transducer. At the end, I will discuss about the proposed method, and then conclude this part.

5.1 Discussion

The mobile robot with the proposed method successfully followed the wall and usefulness of the proposed method was shown in the real experiments. However, unfortunately, this method also has limitations. Here, I would like to conclude merits, limitations and applications of this proposed method.

5.1.1 Merits

The proposed simple method uses the fact that frequency of an echo is mainly depending on the bearing angle of its coming from, and it makes possible to achieve accurate bearing measurement just by using frequency. It can measure more accurate bearing angle than beam width using difference of frequency.

This simple method has two big advantages:

- Simplicity of hardware. We can measure accurate bearing angle by using just one ultrasonic transducer.

- Fast measurement. We can measure accurate bearing angle by using simple process to detect difference of frequency, and consequently you can achieve fast measurement.

This proposed method is based on the background that frequency of the echo is depending on directions in the pulse-echo method, and this fact was also known theoretically. A great significance of the proposed method is that it only payed attention to the frequency and also it showed efficiency in the practical application on the mobile robot.

5.1.2 Limitations

This method has two following limitations:

- Susceptibility to noise due to the dependency on zero crossings. Use of the zero-crossings makes susceptible to noise comparing with use of frequency analysis methods as like Fourier Analysis. However, use of zero-crossings made it possible to do real-time operation with a simple hardware. Because each measurement speed is fast, repetitive measurements can help to know errors, consequently this limitation can be work out by data accumulation.

- Symmetry of the look-up table due to the symmetrical shape of the transducer. This time in the real experiment on the robot, only half of the transducer beam width was exploited to avoid effect of symmetry of the look-up table. However it made the angular measurement range being narrow and it was impossible to measure correct angle when the angle has changed greatly. Use of condition or extra-process in application solve this limitation.

5.1.3 Applications

This method has high potential for various applications. As shown at the application on the robot, this method could measure accurate bearing angle which is consider important information for mobile robots, and consequently it could achieve to follow the wall only with the bearing angle. Even though it is possible to measure distance simultaneously, the robot could move successfully only the bearing angles without using the distance information. The result showed importance of bearing measurement and ability of the proposed method.

This method only require a single transducer and zero-crossing detection. Therefore, it can add the useful bearing information to current pulse-echo method ultrasonic system easily. Also it is possible to make the hardware which uses of this method, and it will achieve much faster accurate angle measurement.

This is not application for a mobile robot, but in case of putting this sensor head at the top of the manipulator, it is possible to measure three dimensional positions with a single ultrasonic transducer using the relationships of measured data.

5.2 Conclusion

In this part, the development of the sensing system which is able to fast measure the bearing angle with a single ultrasonic transducer by analyzing the frequency spectrum of the echo in the pulse-echo method has been proposed. The sensing system employs the zero-crossing time interval of the reflected echo and the look-up table. Consequently it achieved fast measurement.

In the experiments, the results showed that the difference of the object had no great effect on the measurement, and the validity was compared with other methods. Moreover, in the experiment on the real mobile robot, the robot performed the wall following motion only using the angle value to the reflecting point measured by the proposed method. It showed the importance of the ultrasonic bearing information and usefulness of the proposed sensor.